2020-2026 JEEP GLADIATOR 5’ BED

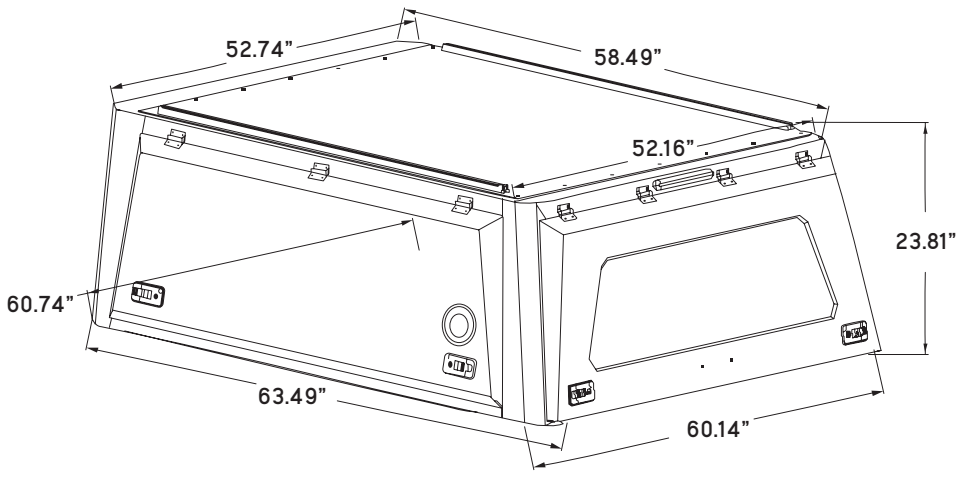

2021-2026 FORD F-150 5.5’ BED

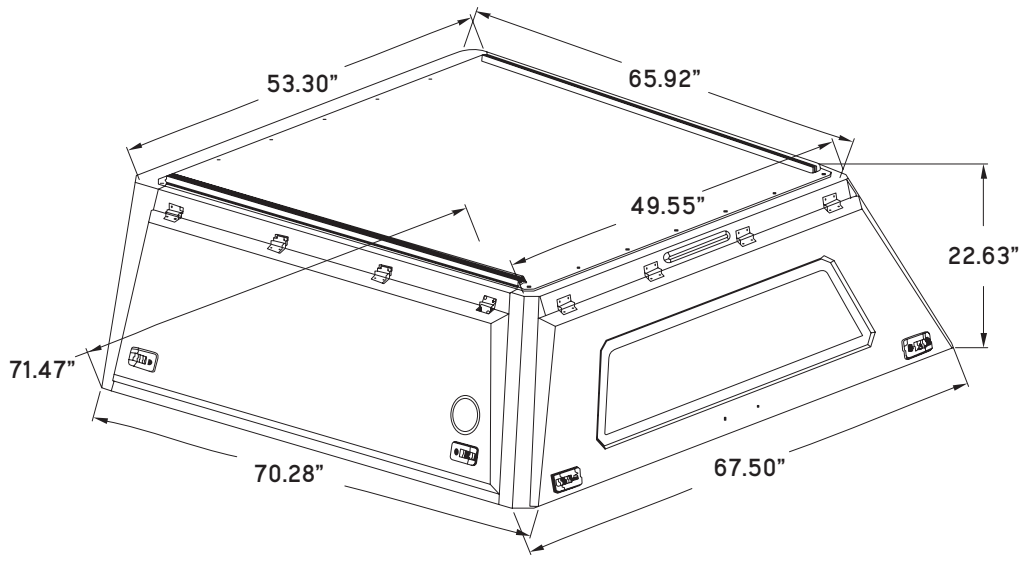

2007-2021 TOYOTA TUNDRA 5.5’ BED

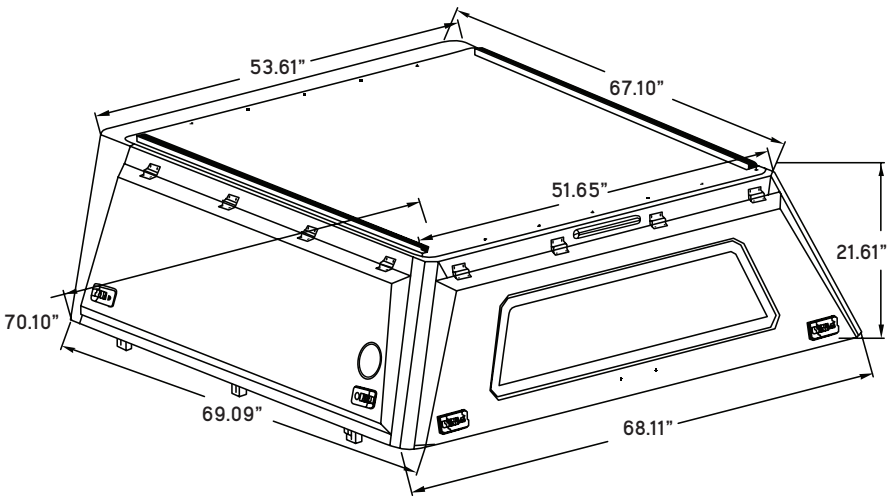

2016-2023 TOYOTA TACOMA 5’ BED

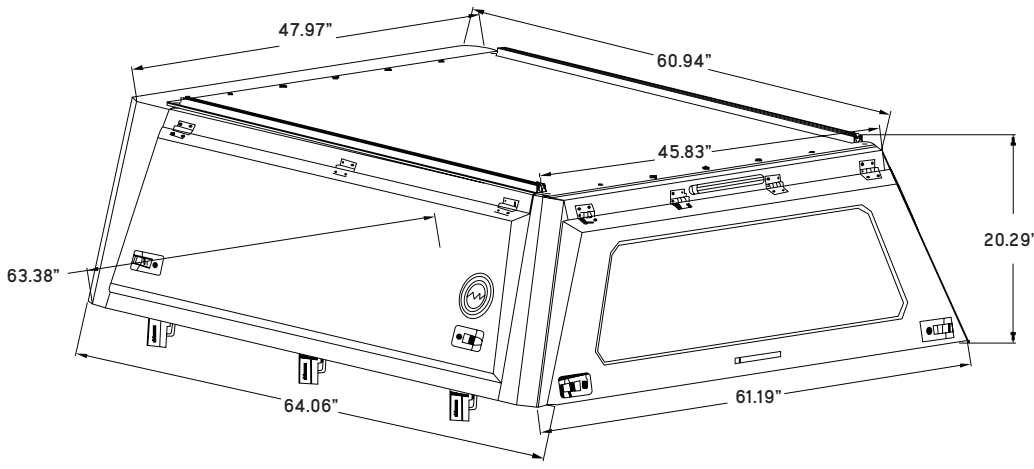

2022-2026 TOYOTA TUNDRA 5.5’ BED

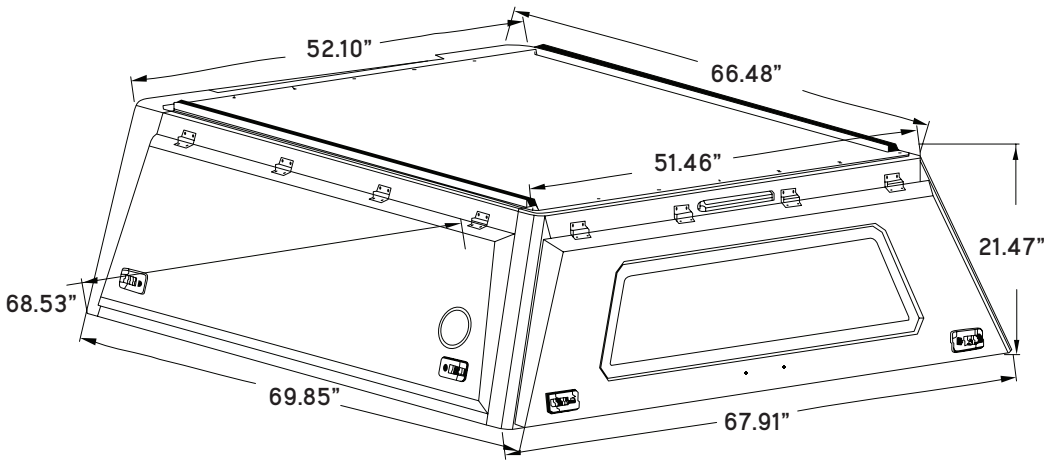

2009-2026 DODGE RAM 2500/3500 6.4’ BED

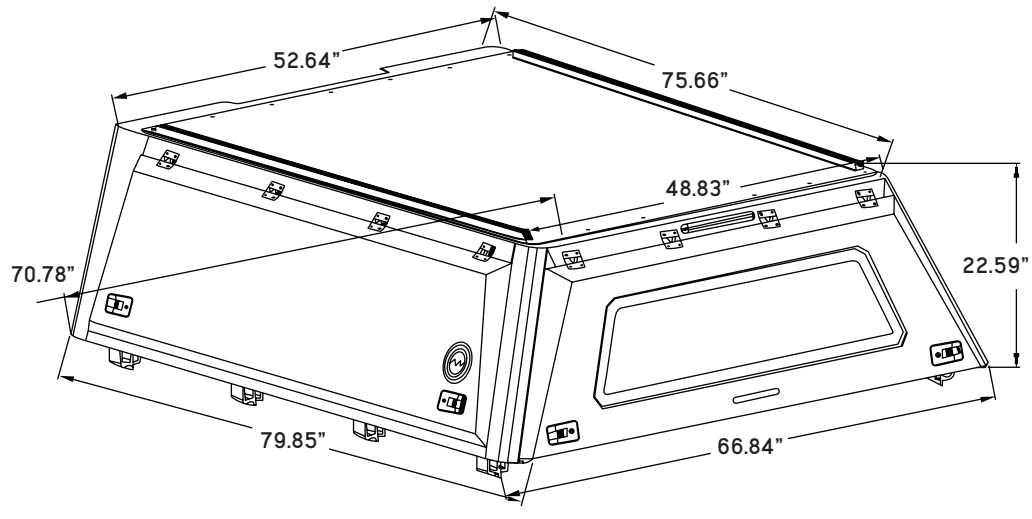

2019-2023 FORD RANGER 5’ BED

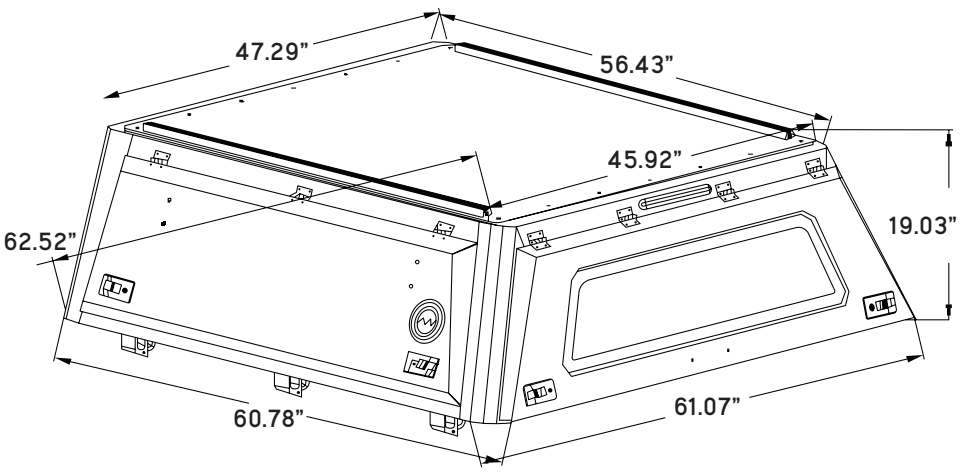

2019-2026 GM 1500 5.8’ BED

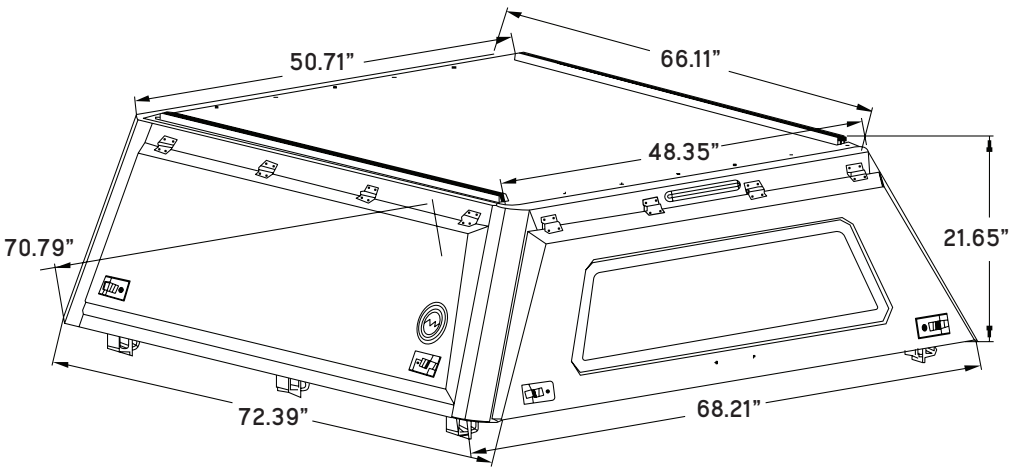

2023-2026 FORD F-250/F-350 6.8’ BED

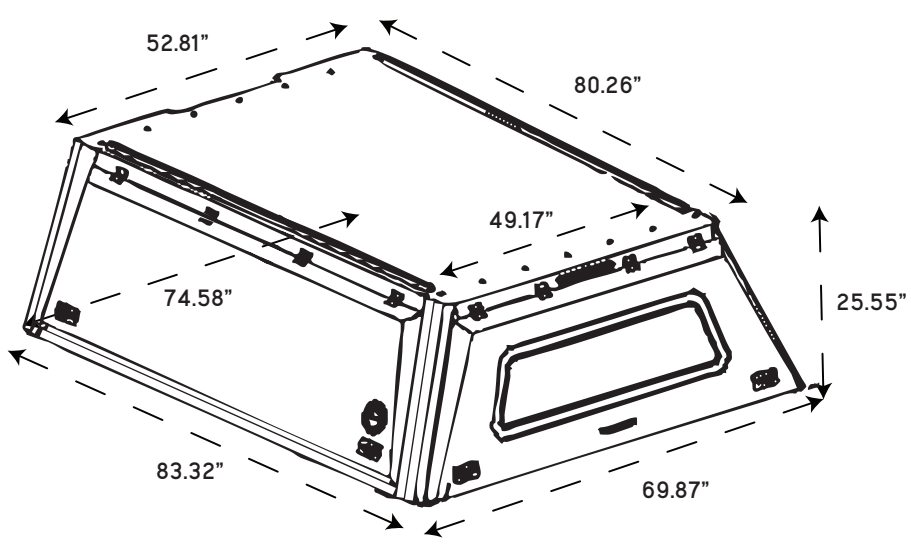

2024-2026 TOYOTA TACOMA 6’ BED

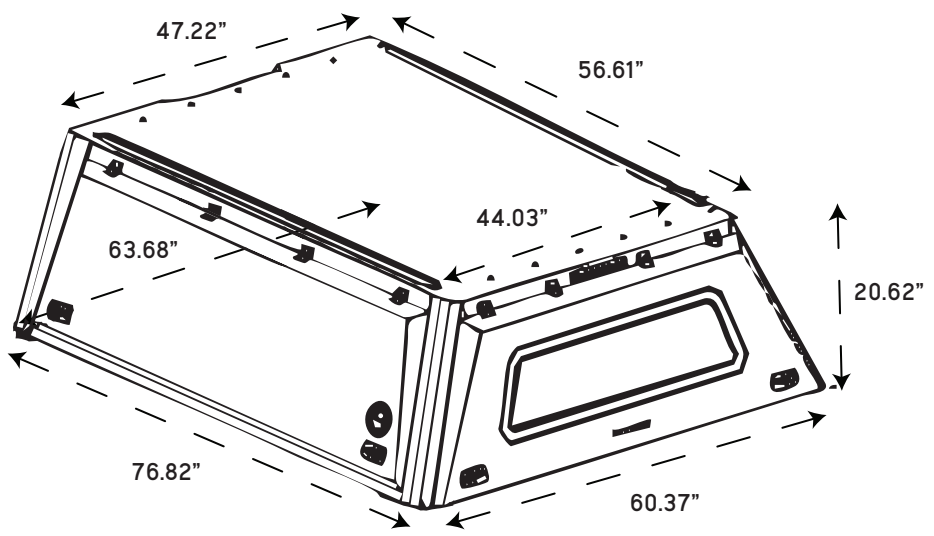

2022-2026 FORD MAVERICK 4.5’ BED

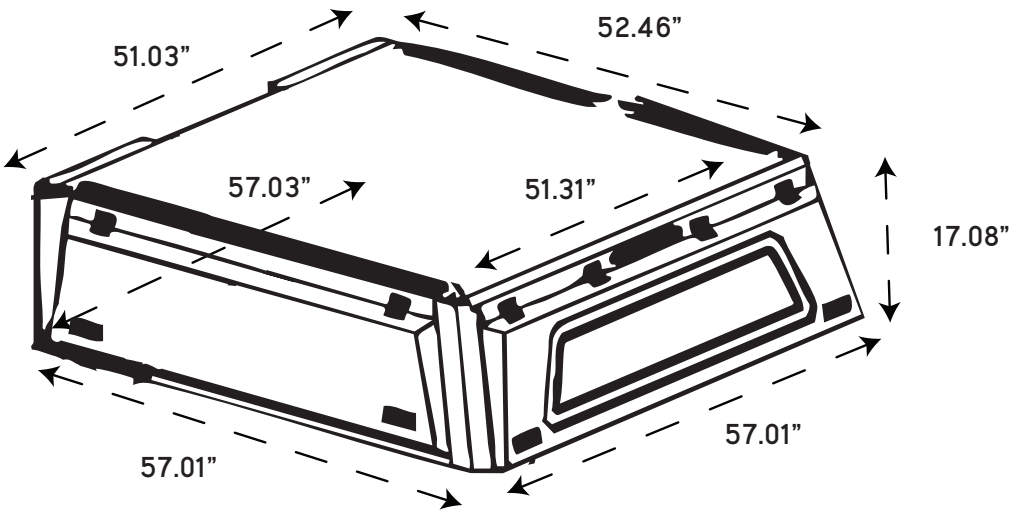

2024-2026 TOYOTA TACOMA 5’ BED

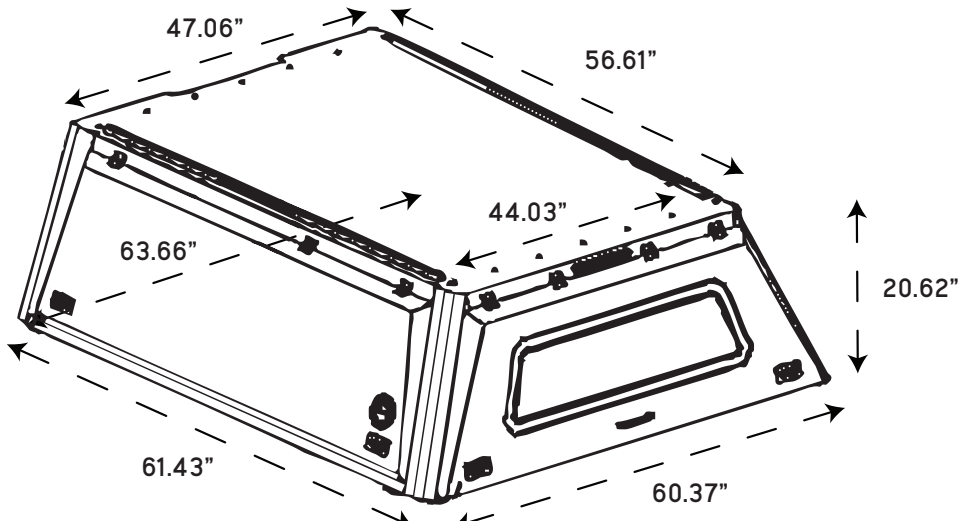

2017-2022 FORD F-250/F-350 6.8’ BED

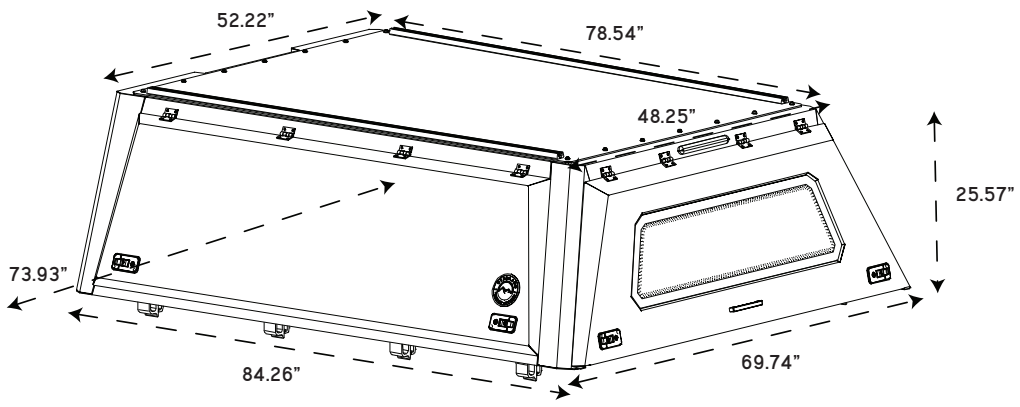

2019-2026 DODGE RAM 1500 5.7’ BED

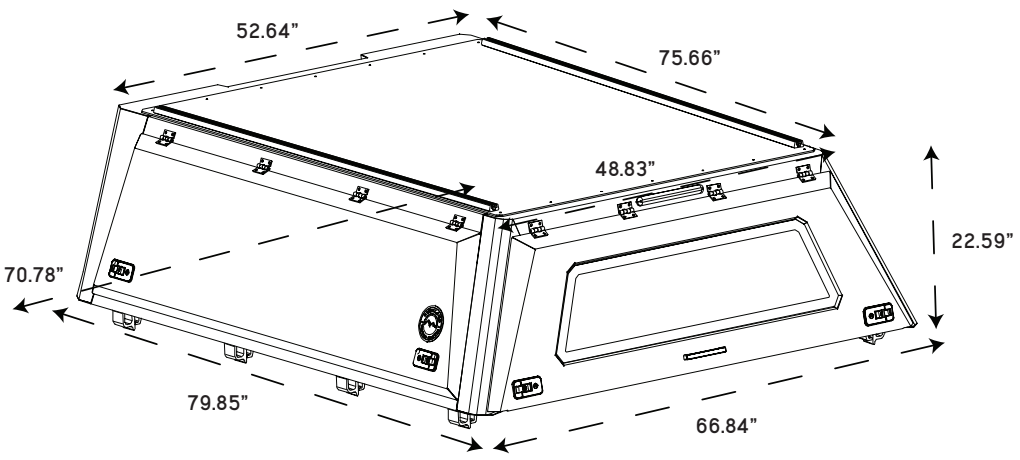

2015-2022 GM COLORADO/CANYON 5’ BED

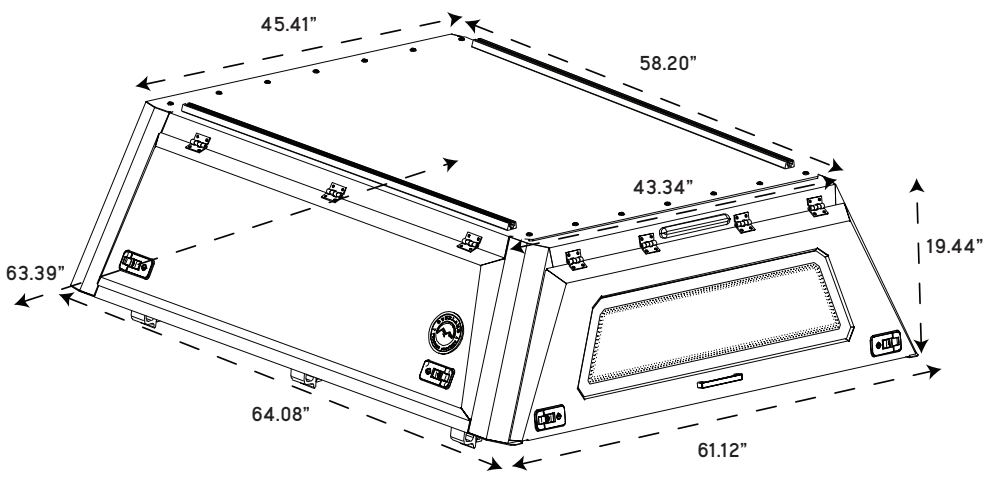

2023-2026 GM COLORADO/CANYON 5’ BED

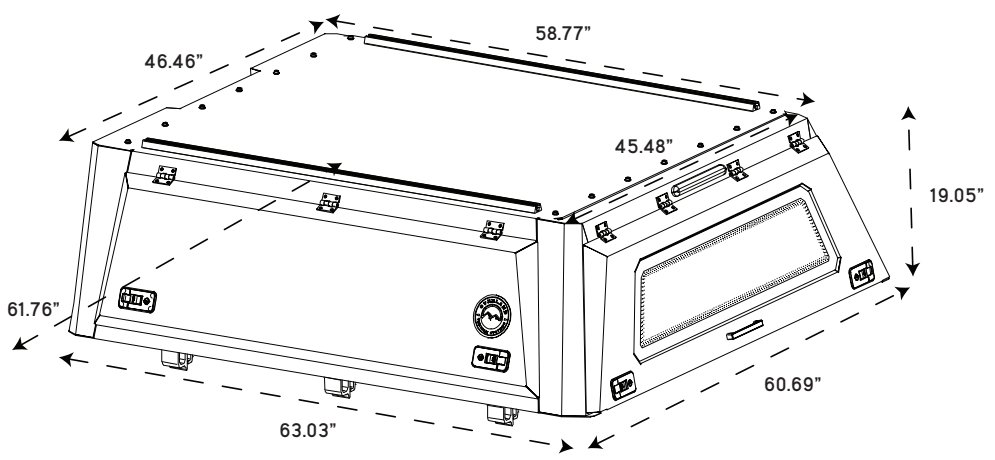

2016-2023 TOYOTA TACOMA 6 FT BED

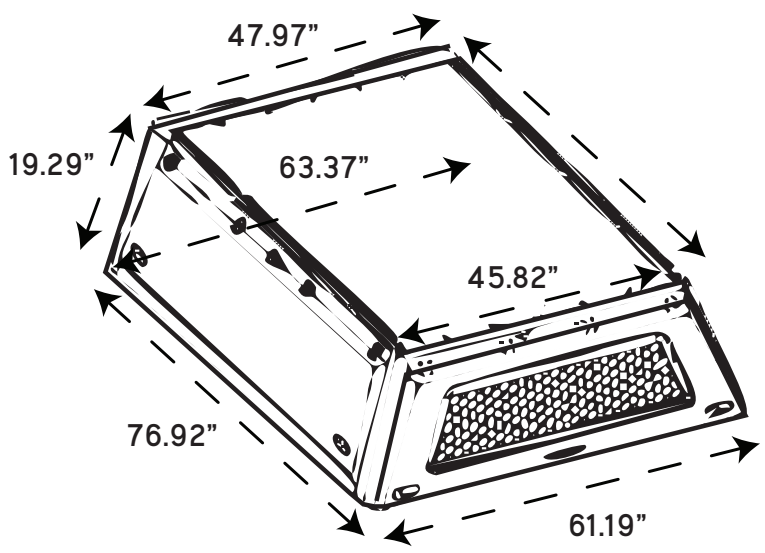

2021-2026 FORD F-150 6.5 FT BED

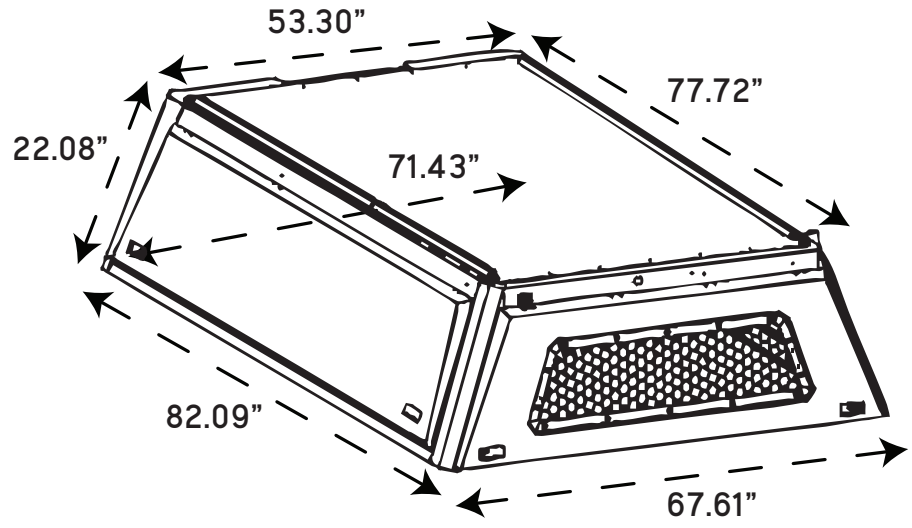

2020-2026 GM 2500/3500 6.9 FT BED

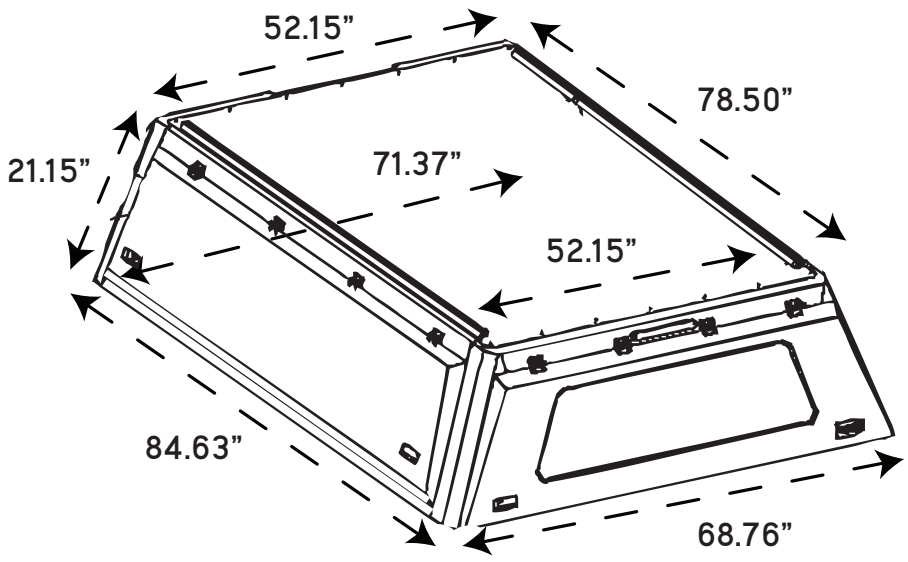

2024-2026 FORD RANGER CREW CAB 5 FT BED

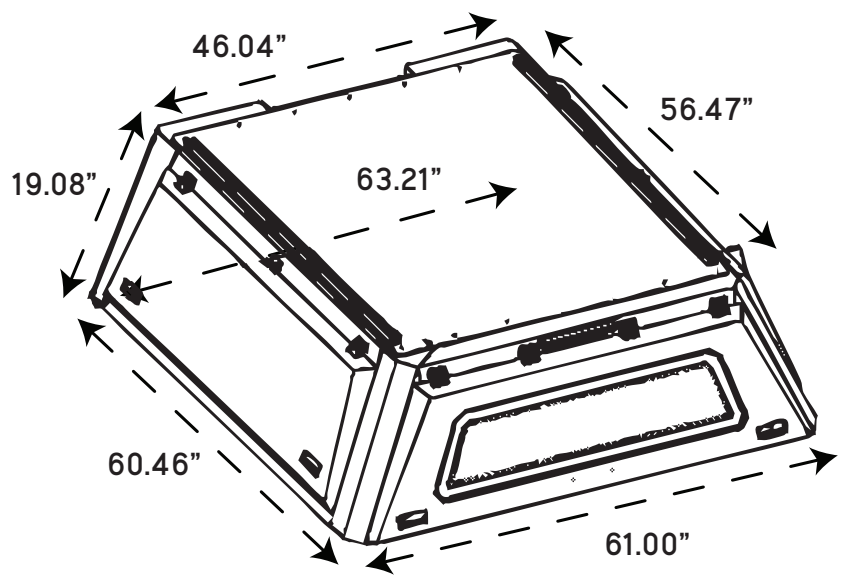

2019-2027 GM 1500 6.6 FT BED

